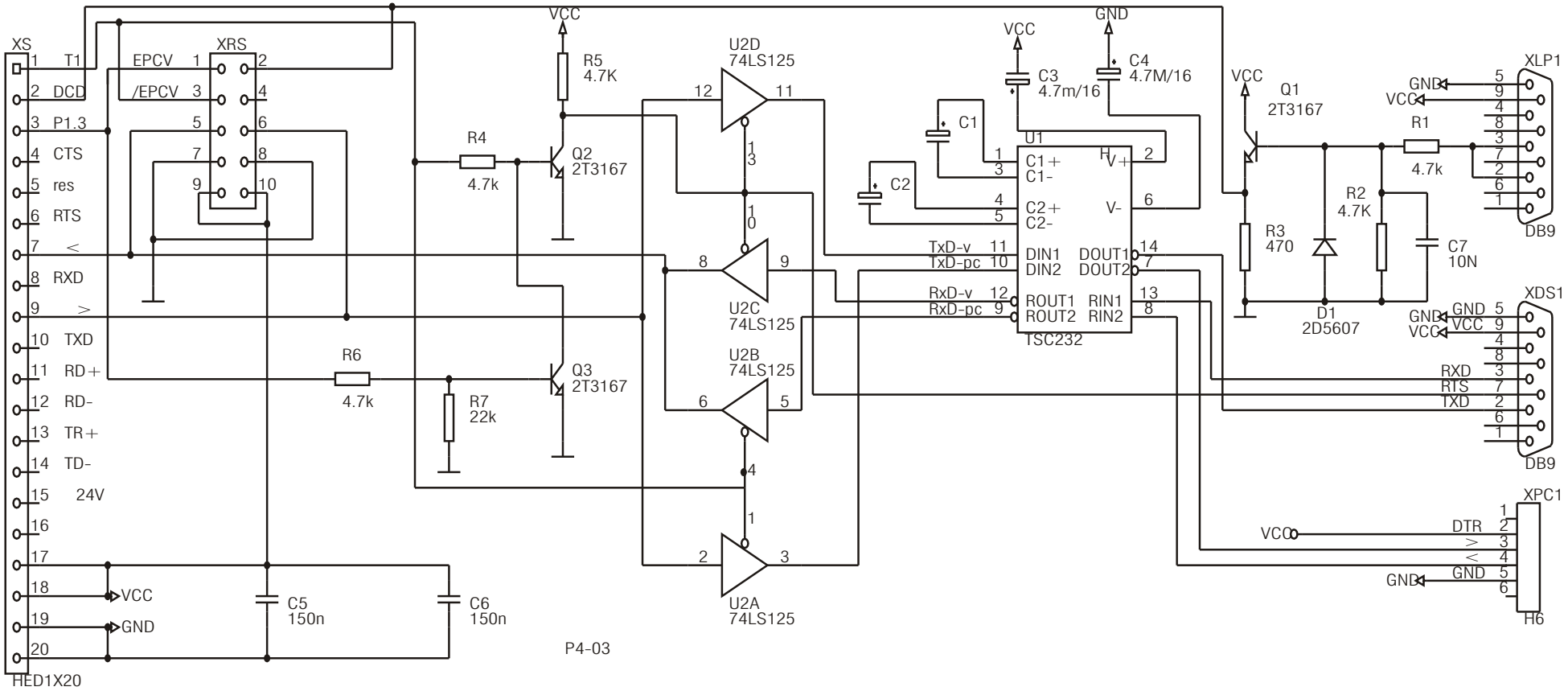
XS
T1
DCD
P1.3
CTS
res
RTS
<
RXD
>
TXD
RD+
RD-
TR+
TD-
24V
VCC
GND
HED1X20
XRS
EPCV
/EPCV
R4
4.7k
R5
4.7K
Q2
2T3167
R6
4.7k
R7
22k
Q3
2T3167
C5
150n
C6
150n
U2D
74LS125
U2C
74LS125
U2B
74LS125
U2A
74LS125
C1
C2
C3
4.7m/16
C4
4.7M/16
U1
C1+
C1-
C2+
C2-
V+
V-
DIN1
DIN2
DOUT1
DOUT2
ROUT1
ROUT2
RIN1
RIN2
TxD-v
TxD-pc
RxD-v
RxD-pc
TSC232
Q1
2T3167
R3
470
R2
4.7K
D1
2D5607
R1
4.7k
C7
10N
XLP1
DB9
XDS1
DB9
RXD
RTS
TXD
XPC1
DTR
H6
P4-03